Spatial Resolution of IKONOS Panchromatic Images: Characterization Based on Edge Responses

Slawomir Blonski

Lockheed Martin Space Operations
Commercial Remote Sensing Program
NASA Stennis Space Center

March 19 - 21, 2001

phone: (228) 688-1944
e-mail: sblonski@ssc.nasa.gov

Contributors

Mary Pagnutti	LMSO, Stennis
Robert Ryan	LMSO, Stennis
Vicki Zanoni	NASA, Stennis
Tom Stanley	NASA, Stennis

IKONOS V&V: Spatial Resolution

- *Goal:* use edge response to characterize spatial resolution of IKONOS panchromatic products: georeferenced images in UTM projection, processed with radiometric correction and MTF compensation, resampled using a bicubic method
- *Approach:* characterize spatial resolution by FWHM of line spread function and MTF at Nyquist frequency
- *Extra:* evaluate effects of MTF compensation and collection elevation angle

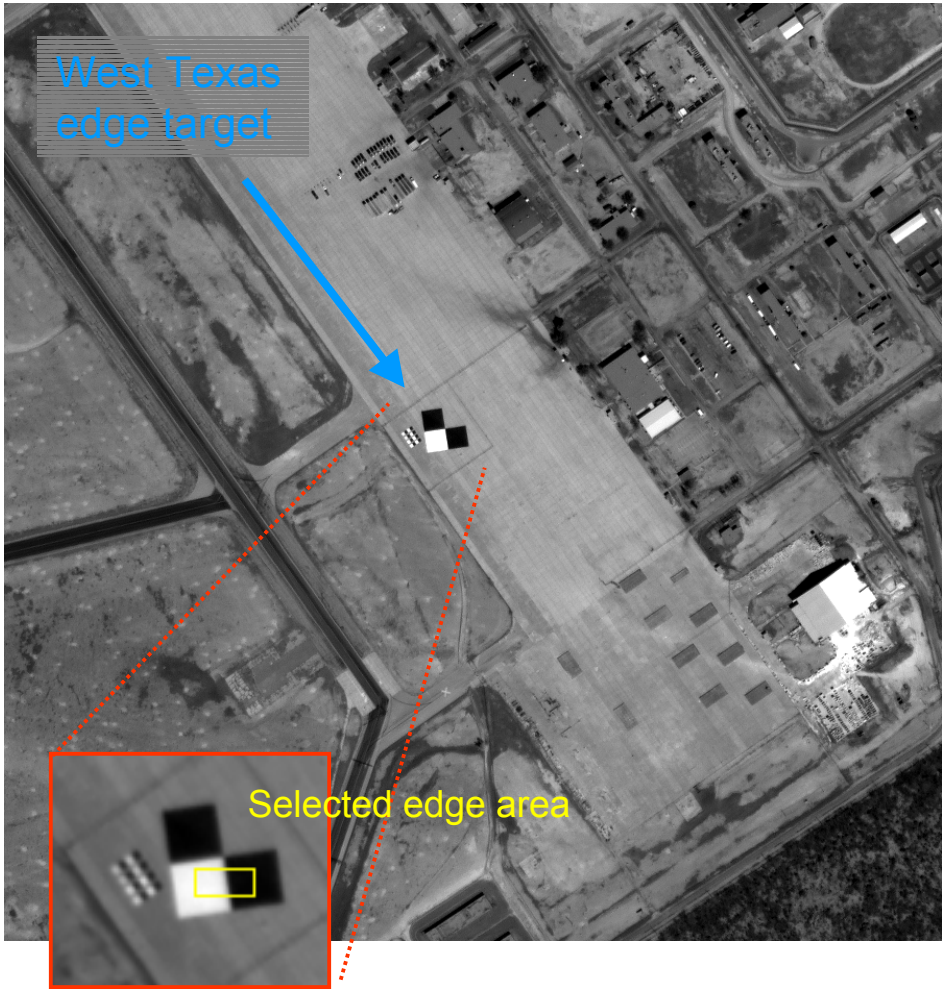

Modified Knife-Edge Technique

Selected edge area includes
a set of edge responses,
each one with edge position shifted by
a fraction of pixel from an adjacent one

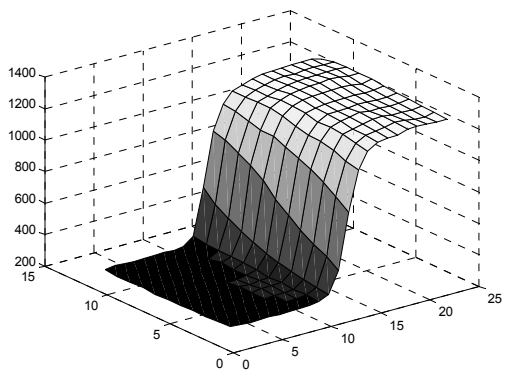

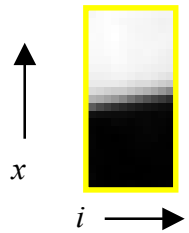

Actual intensity in the edge area

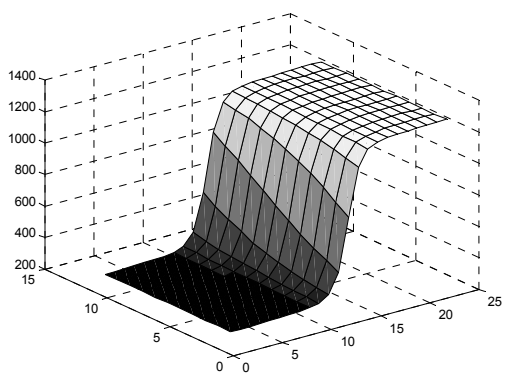

Best fit with the sigmoidal functions

Nonlinear least-square fit of a two-dimensional function which is a superposition of three sigmoidal functions

$$e_i(x) = d + \sum_{k=1}^{3} \frac{a_k}{1+\exp\left[\frac{x - b_1 i - b_2}{c_k}\right]}$$

- Optimized parameters: a_1, a_2, a_3, b_1, b_2, c_1, c_2, c_3, d
- Position and orientation of the edge, described by parameters b_1 and b_2, are found simultaneously with the parameters characterizing spatial resolution (c_1, c_2, and c_3)
- Measured edge tilt: $\theta = \tan^{-1}(b_1)$
- Distance is scaled by cosine of the edge tilt angle:

$$x' = x \cos(\theta)$$

Measured Edge Response

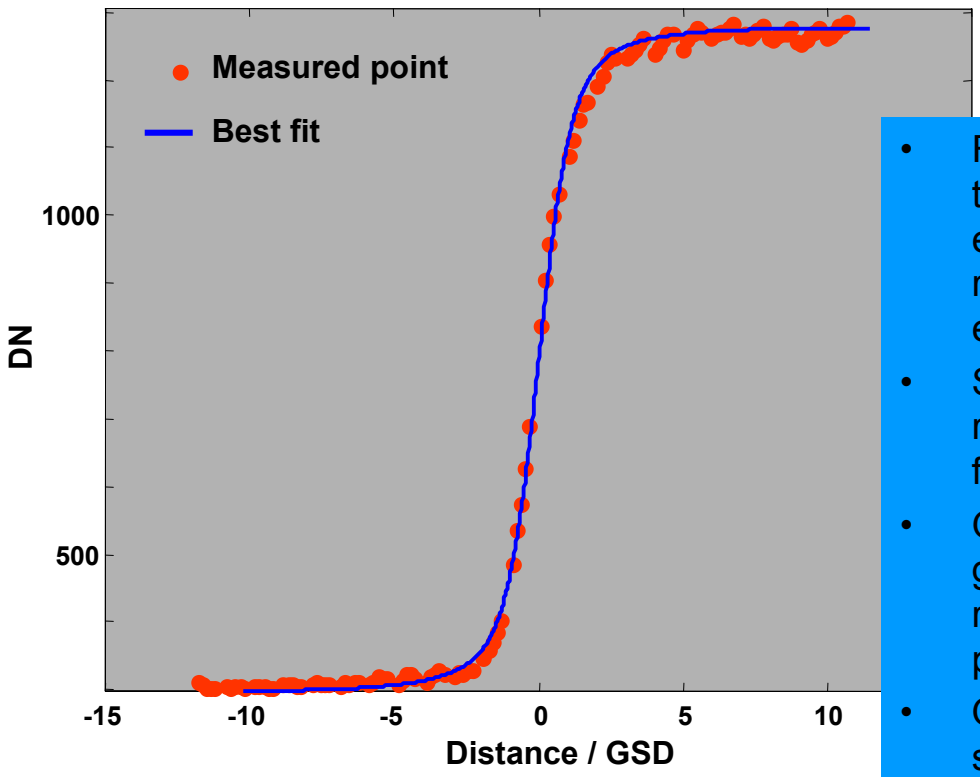

- Finding position and orientation of the edge allows for shifting of the edge responses to a single reference location so that all the edge points are aligned
- Superimposing all the shifted edge responses creates a new one with a finer spatial sampling
- Optimized edge response is generated with arbitrary spatial resolution from the best-fit parameters
- Quality of fit is examined: Is the superposition of sigmoidal functions appropriate to model the edge response?

Line Spread Function

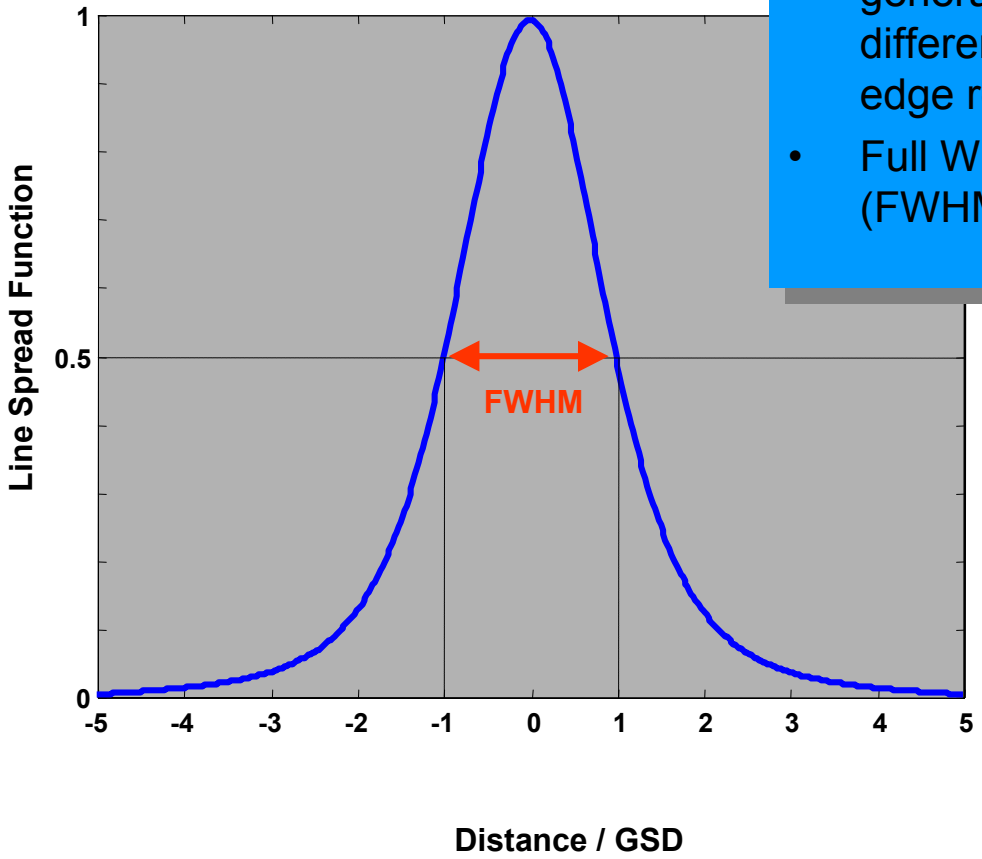

- Line-spread function (LSF) is generated by numerical differentiation of the optimized edge response
- Full Width at Half Maximum (FWHM) of the LSF is calculated

Modulation Transfer Function

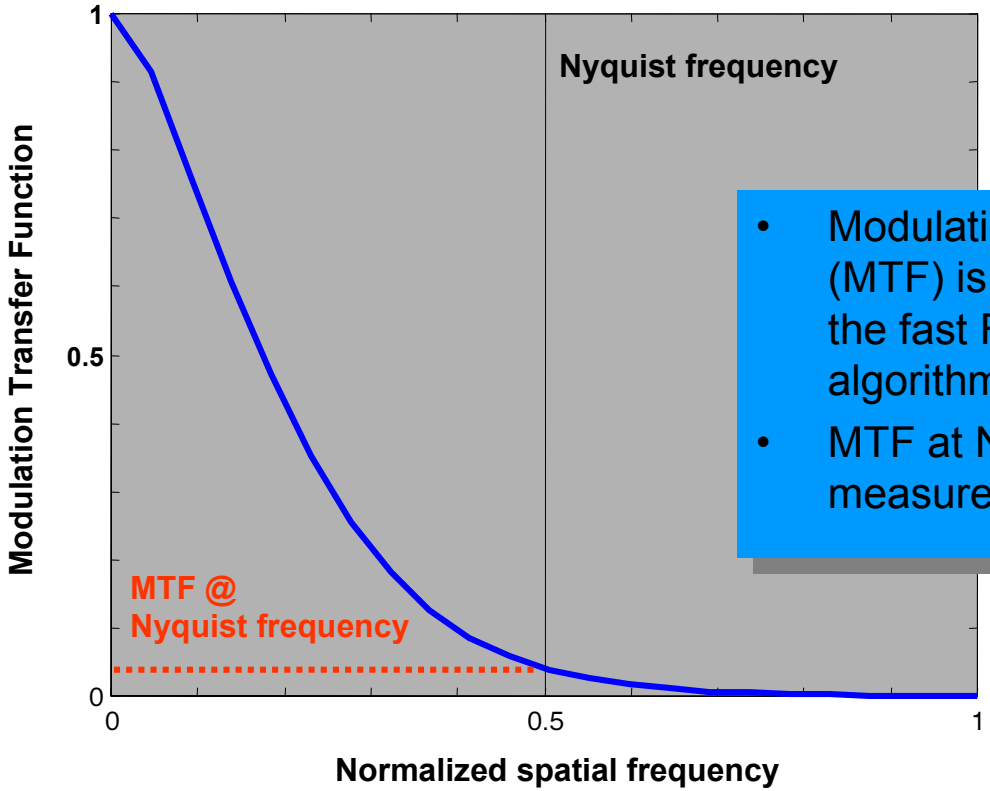

- Modulation Transfer Function (MTF) is generated by applying the fast Fourier transform (FFT) algorithm to the LSF
- MTF at Nyquist frequency is measured

Selected Edge Areas

Rectangular edge response regions selected for analysis of spatial resolution from the images acquired on March 26, 2000.

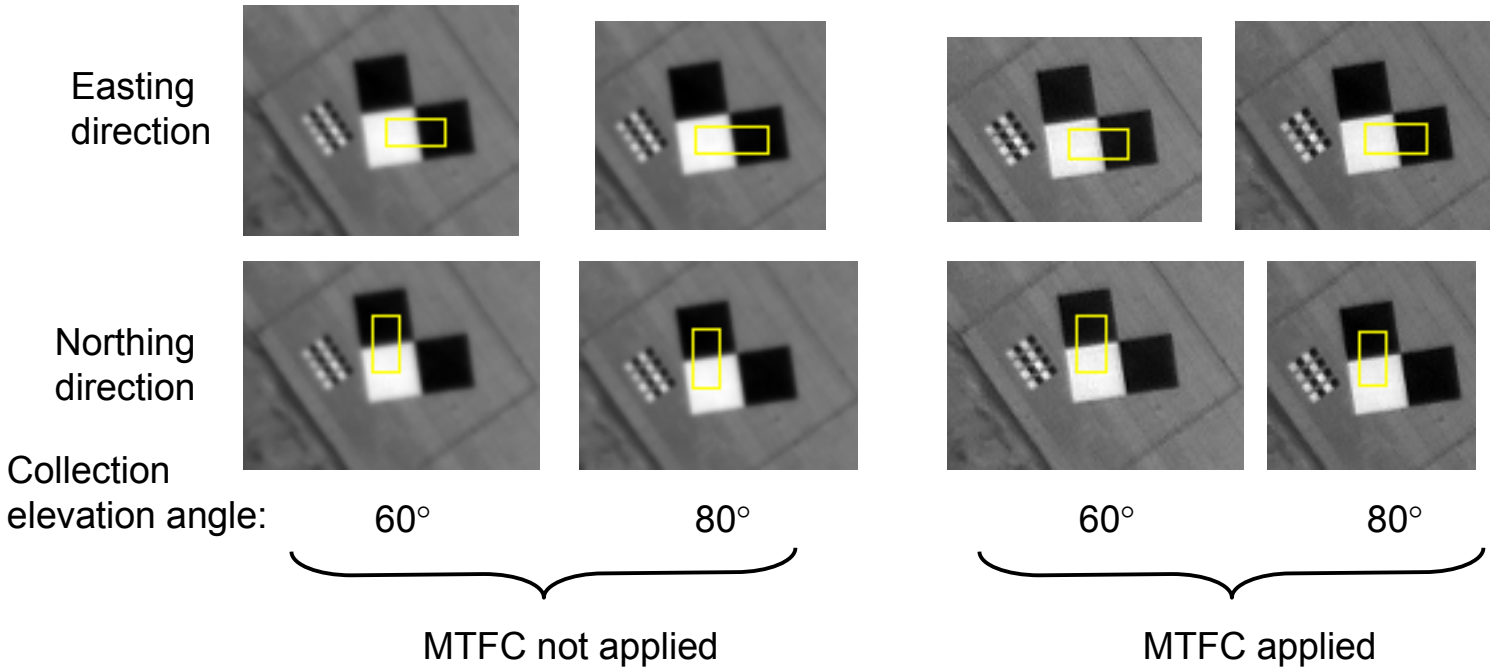

Edge Responses: Easting, 60°

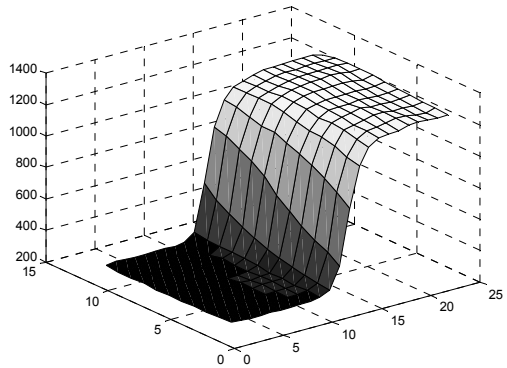

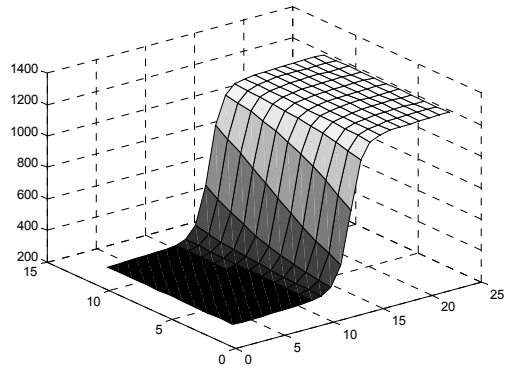

MTFC
not applied

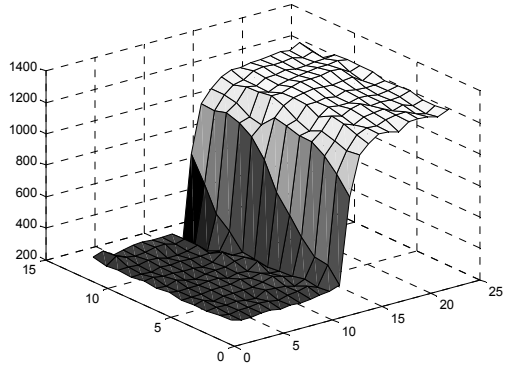

Measured

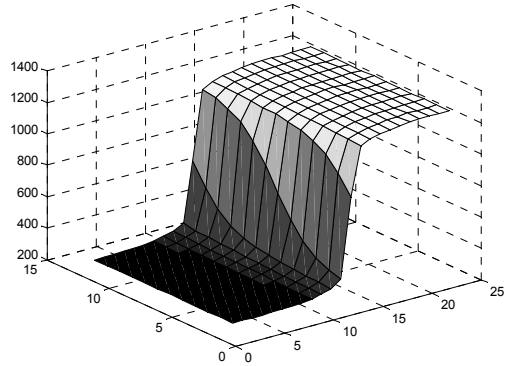

Best fit

MTFC
applied

Edge Responses: Northing, 60°

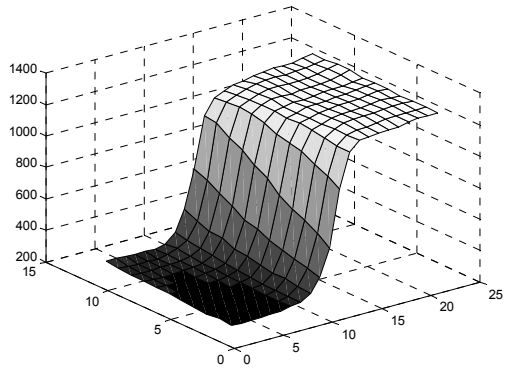

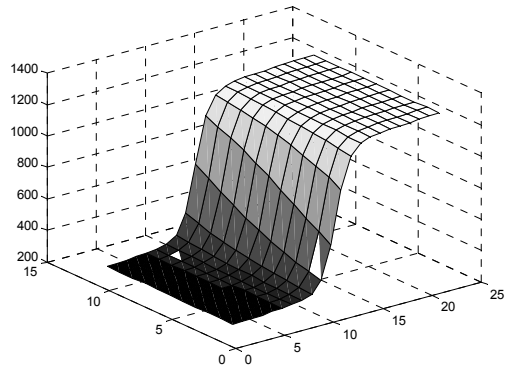

MTFC
not applied

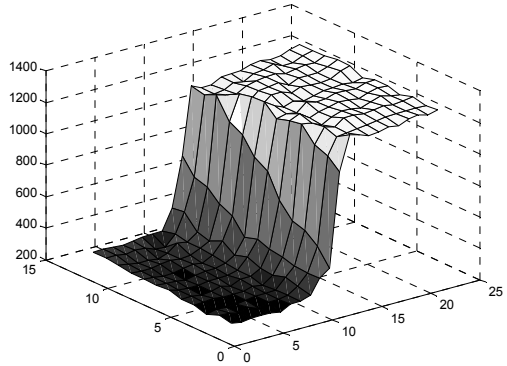

Measured

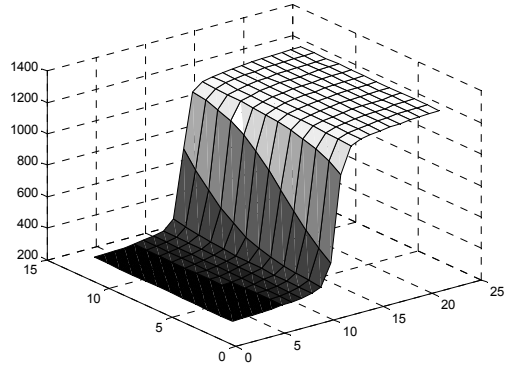

Best fit

MTFC
applied

Edge Responses: Easting, 80°

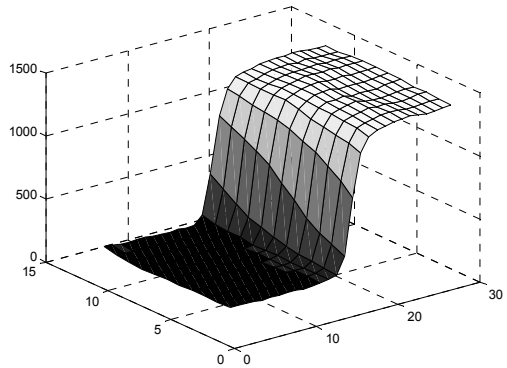

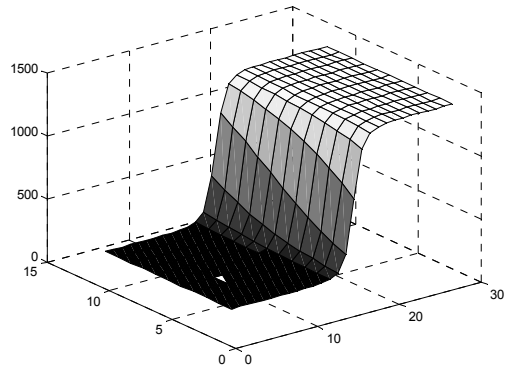

MTFC
not applied

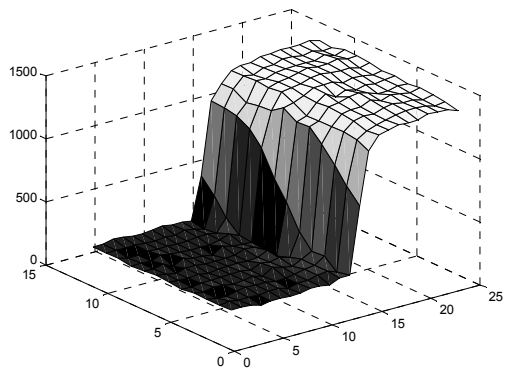

Measured

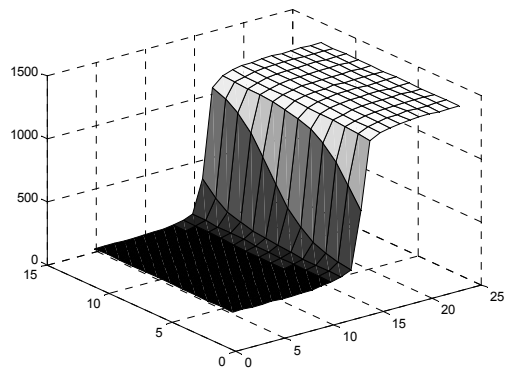

Best fit

MTFC
applied

Edge Responses: Northing, 80°

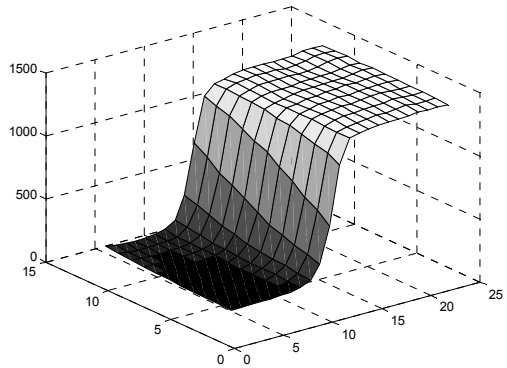

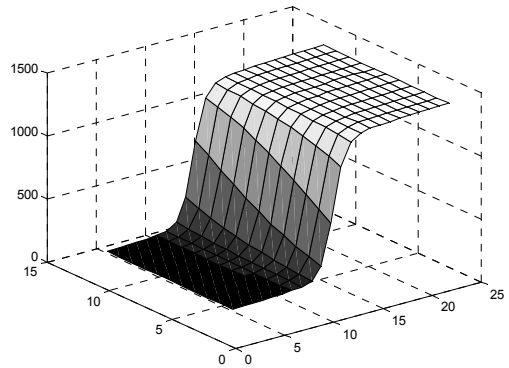

MTFC
not applied

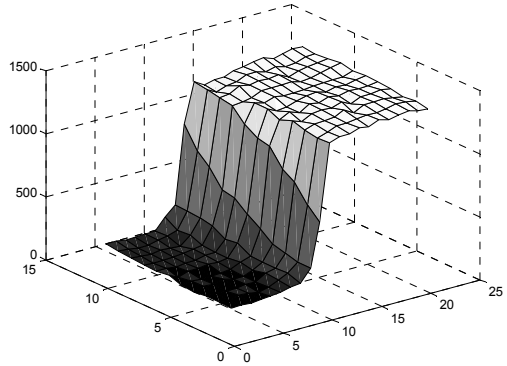

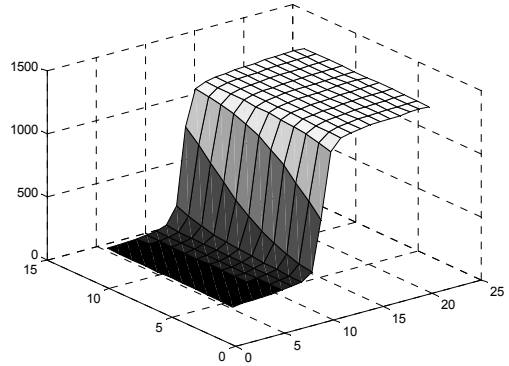

MTFC
applied

Measured

Best fit

Edge Response: Easting

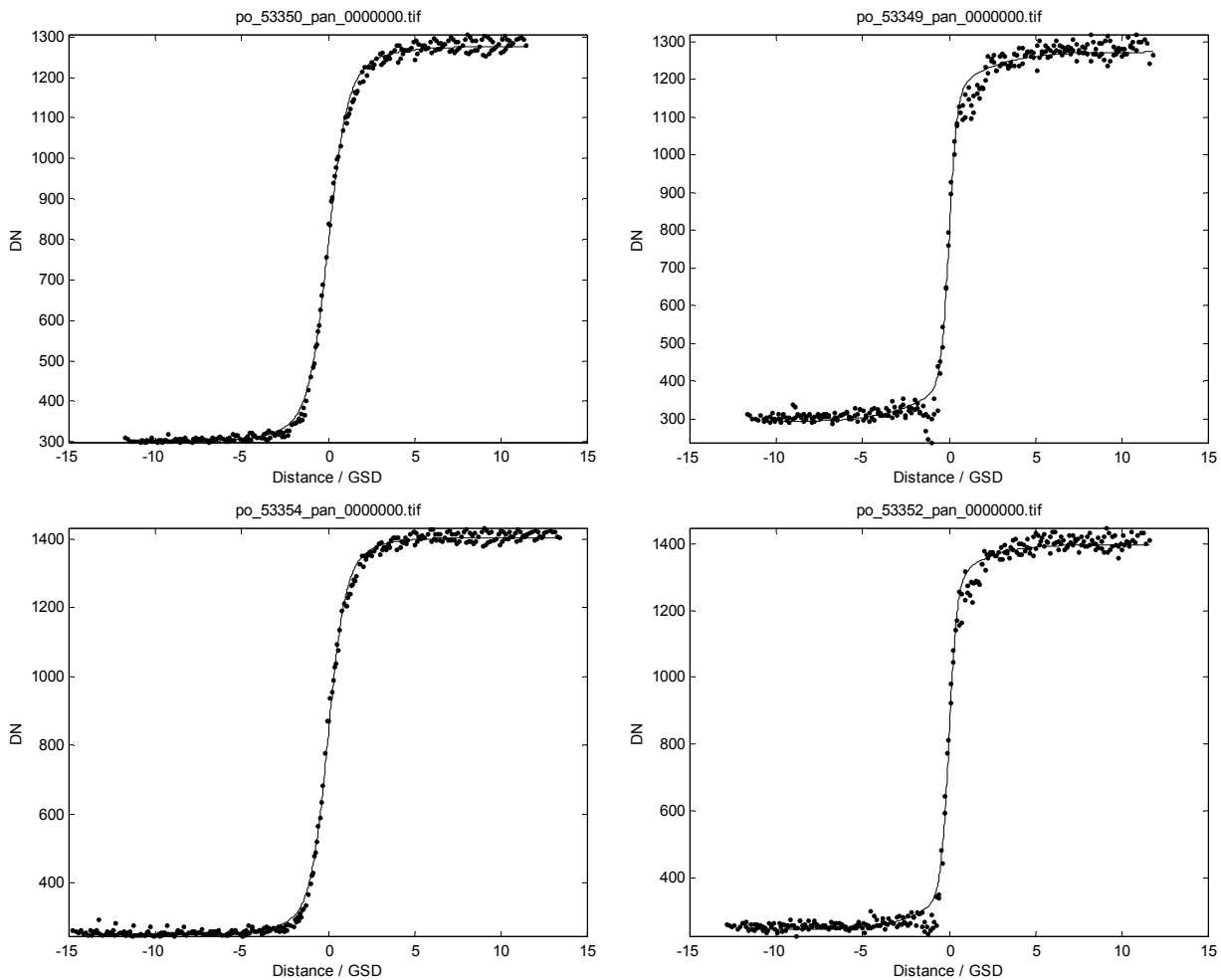

MTFC not applied

MTFC applied

Superimposed edge responses and the fitted sigmoidal functions

60°

80°

Estimation of the edge tilt from the pixel (UTM) grid: about 9°

Edge Response: Northing

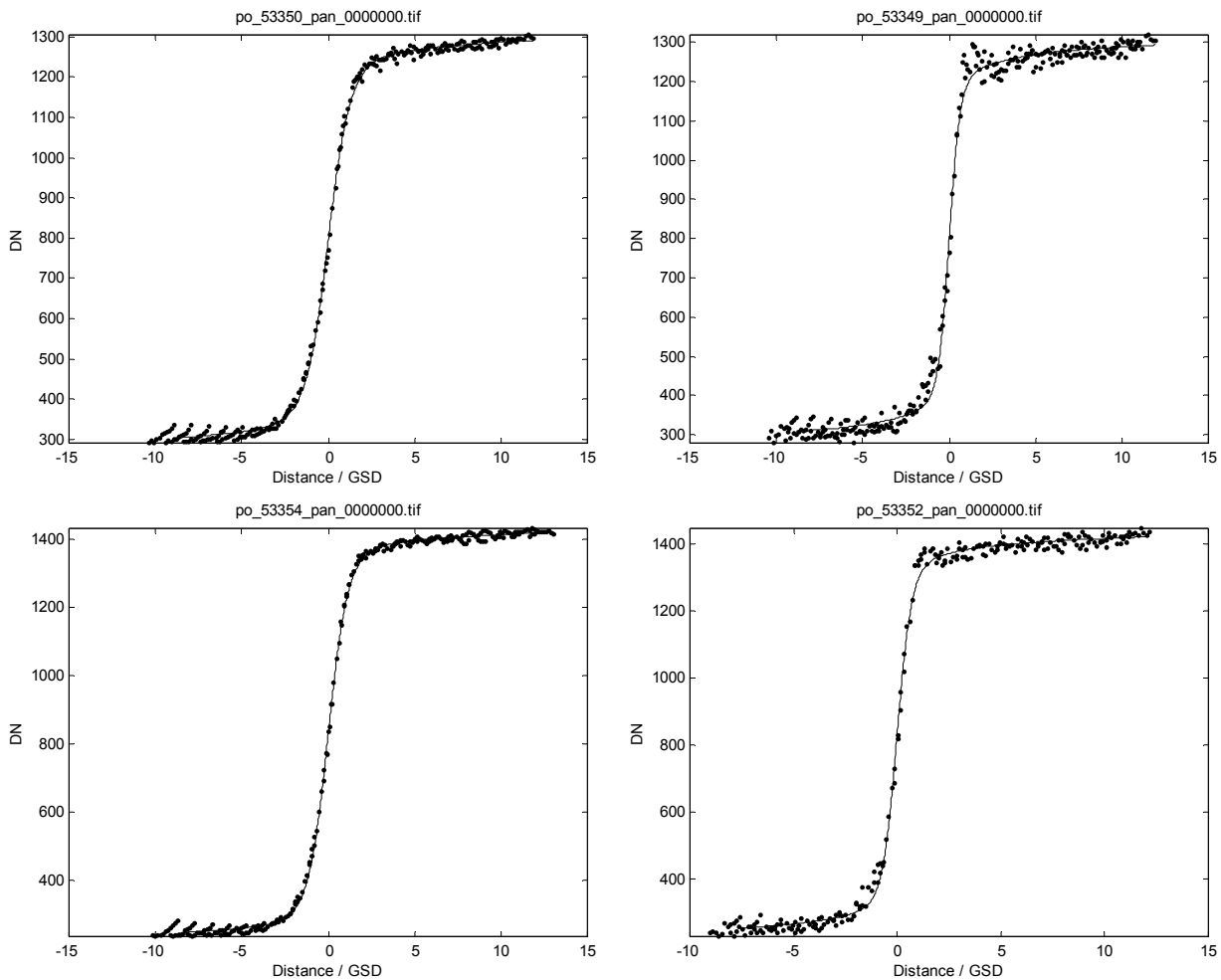

MTFC not applied

MTFC applied

Superimposed edge responses and the fitted sigmoidal functions

60°

80°

Estimation of the edge tilt from the pixel (UTM) grid: about 8°

Line Spread Function: Easting

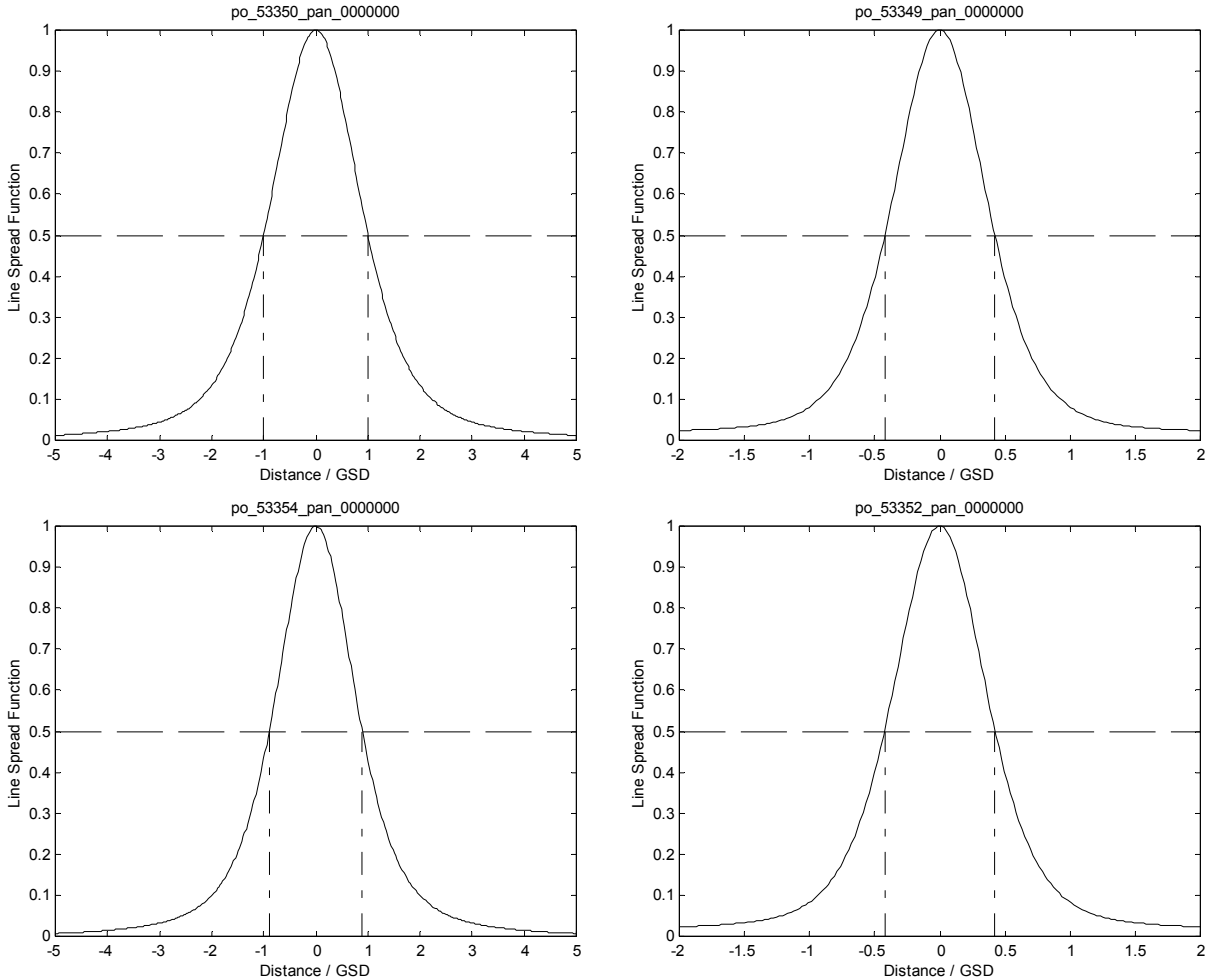

Line spread functions derived from the edge responses

60°

80°

Note the difference in distance scale between left and right column

MTFC not applied

MTFC applied

Line Spread Function: Northing

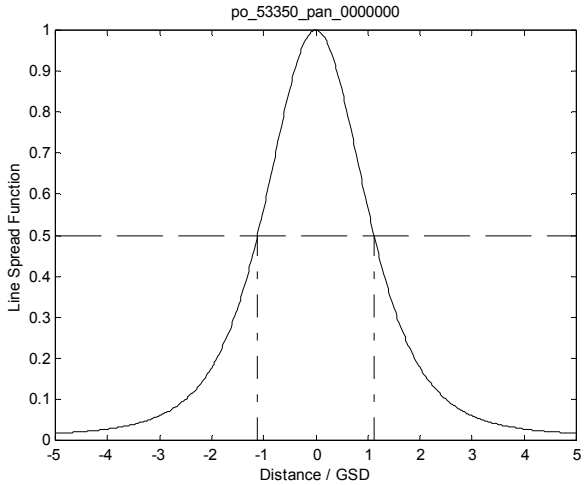

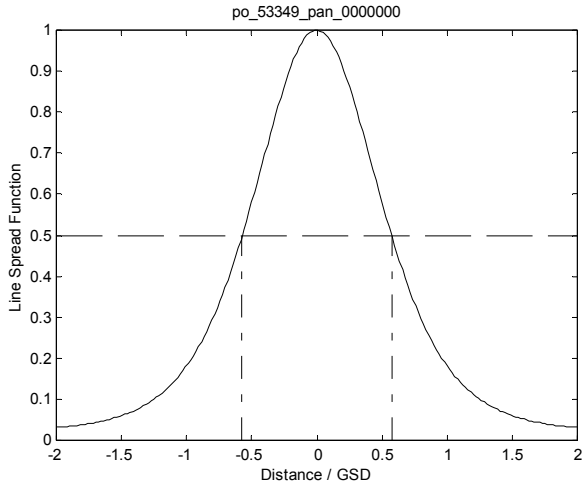

Line spread functions derived from the edge responses

60°

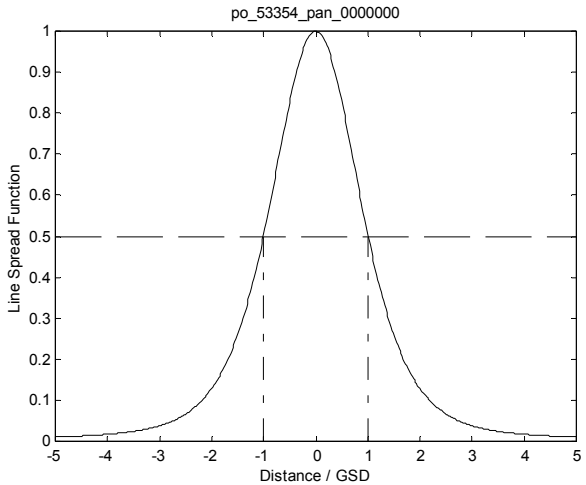

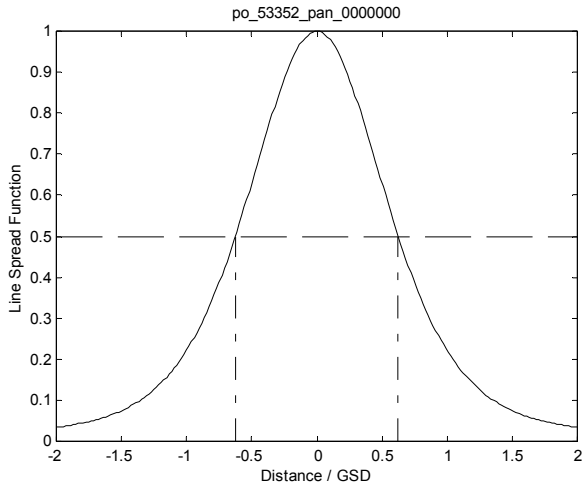

80°

Note the difference in distance scale between left and right column

MTFC not applied

MTFC applied

Summary: FWHM / GSD

	MTFC	Collection Elevation Angle	
		60°	80°
Easting	off	2.01	1.79
	on	0.85	0.85
Northing	off	2.23	2.01
	on	1.15	1.25

MTF: Easting

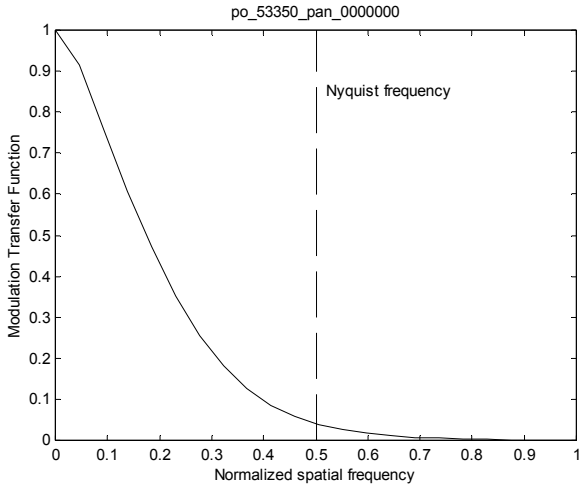

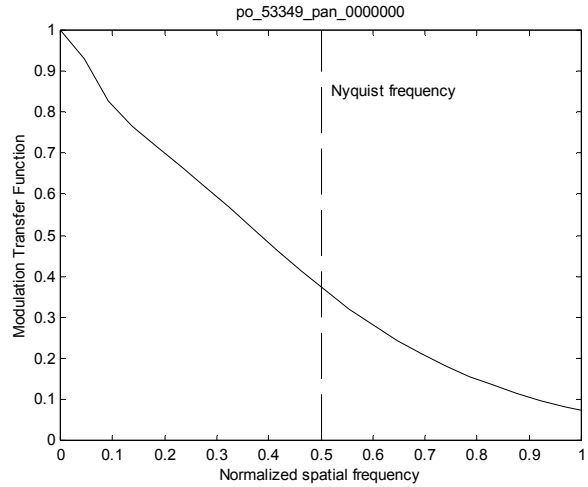

MTF estimated from the Line Spread Functions

60°

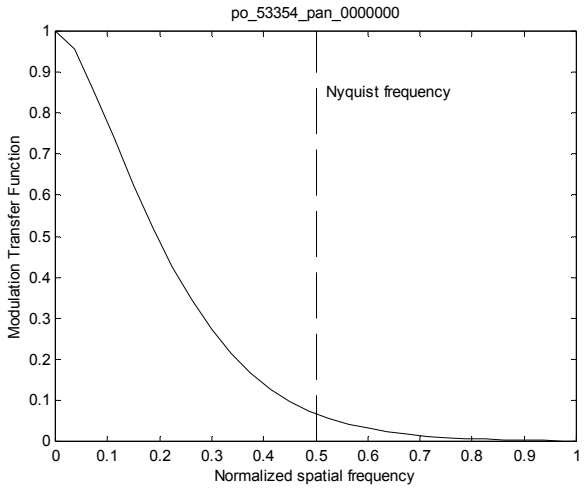

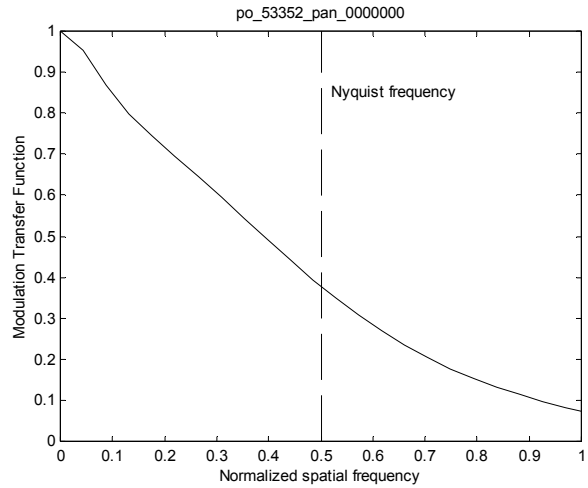

80°

MTFC not applied

MTFC applied

MTF: Northing

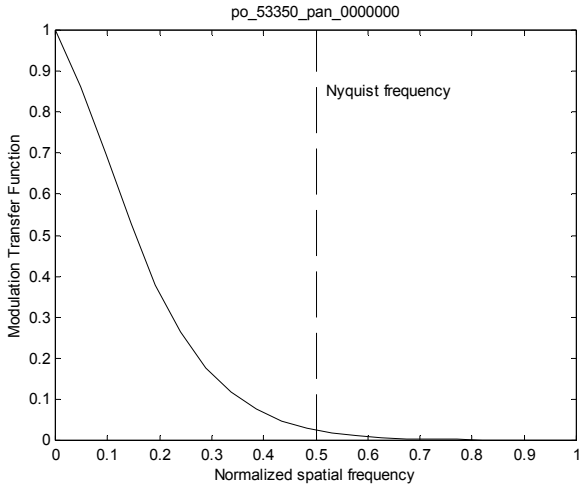

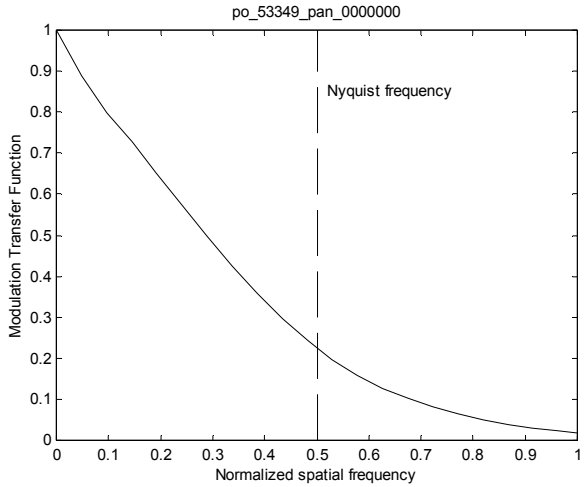

MTF estimated from the Line Spread Functions

60°

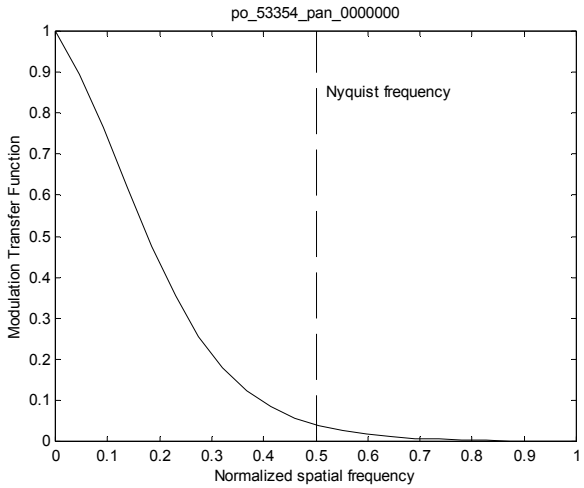

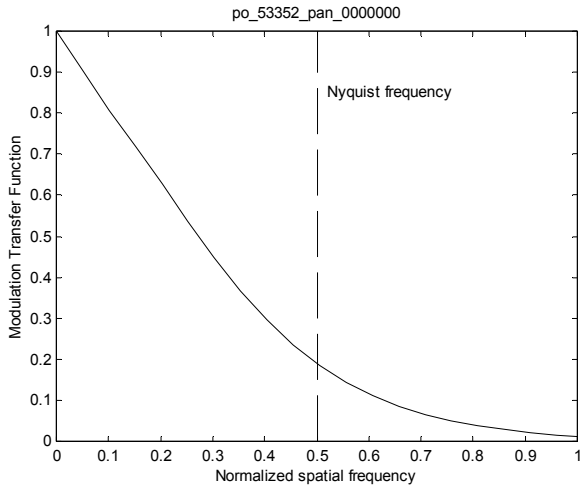

80°

MTFC not applied

MTFC applied